RoHS	Reach

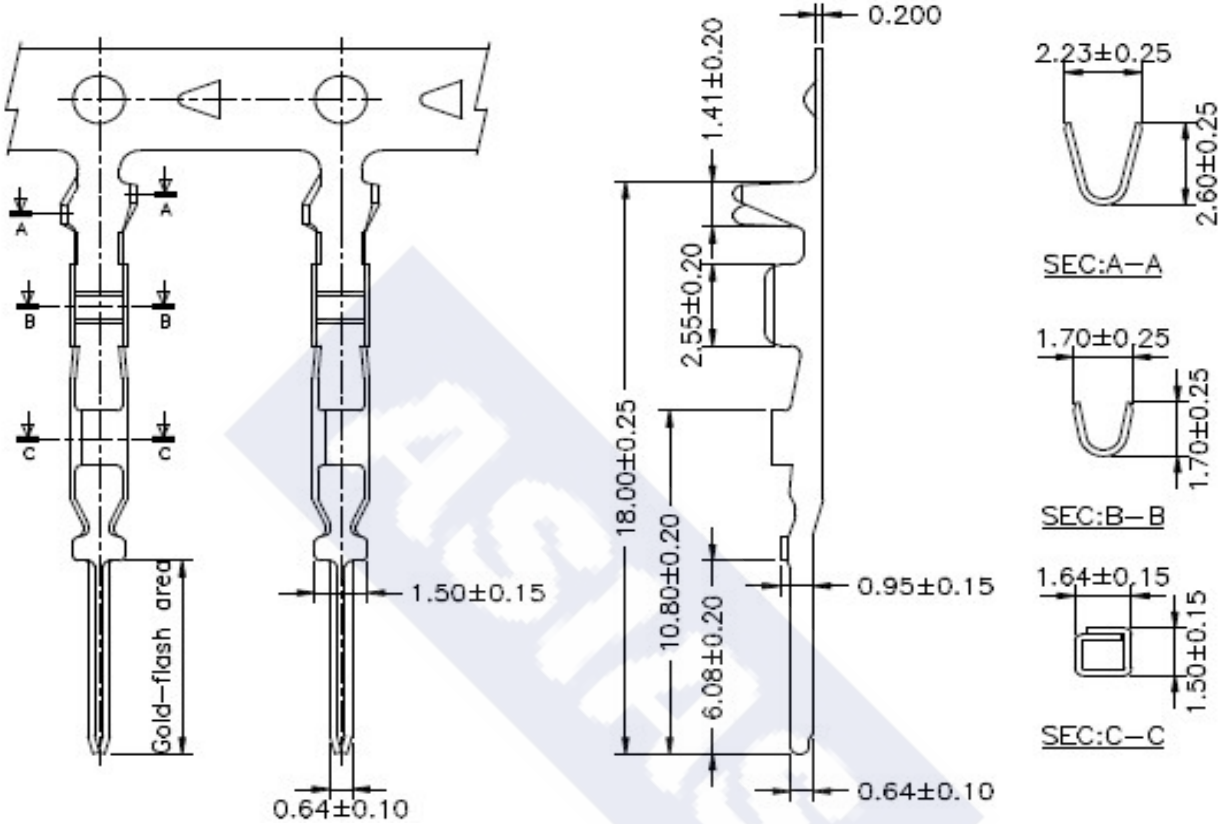

Ordering Information & Specification

Part NO.	Wire Range	Insulation O.D.	Material	Finish	SPQ
2545JT-TB-M	AWG#22~AWG#26	1.63mm(max)	Brass	Tin-plated	10,000 pcs/reel
2545JT-HB-M	AWG#22~AWG#26	1.63mm(max)	Brass	Gold-flash	10,000 pcs/reel

** Stamping before plating

ASIAS ASIAS TECHNOLOGY CO.,LTD.	DESCRIPTION : **2.54mm Pitch, Crimp Terminal, M Type**	**GENERAL TOLERANCE**	
	PART NO. : **2545JT-XB-M**	X.X ± 0.25 X.XX ± 0.15 X.XXX ± 0.05	SCALE : Free