RoHS	Reach

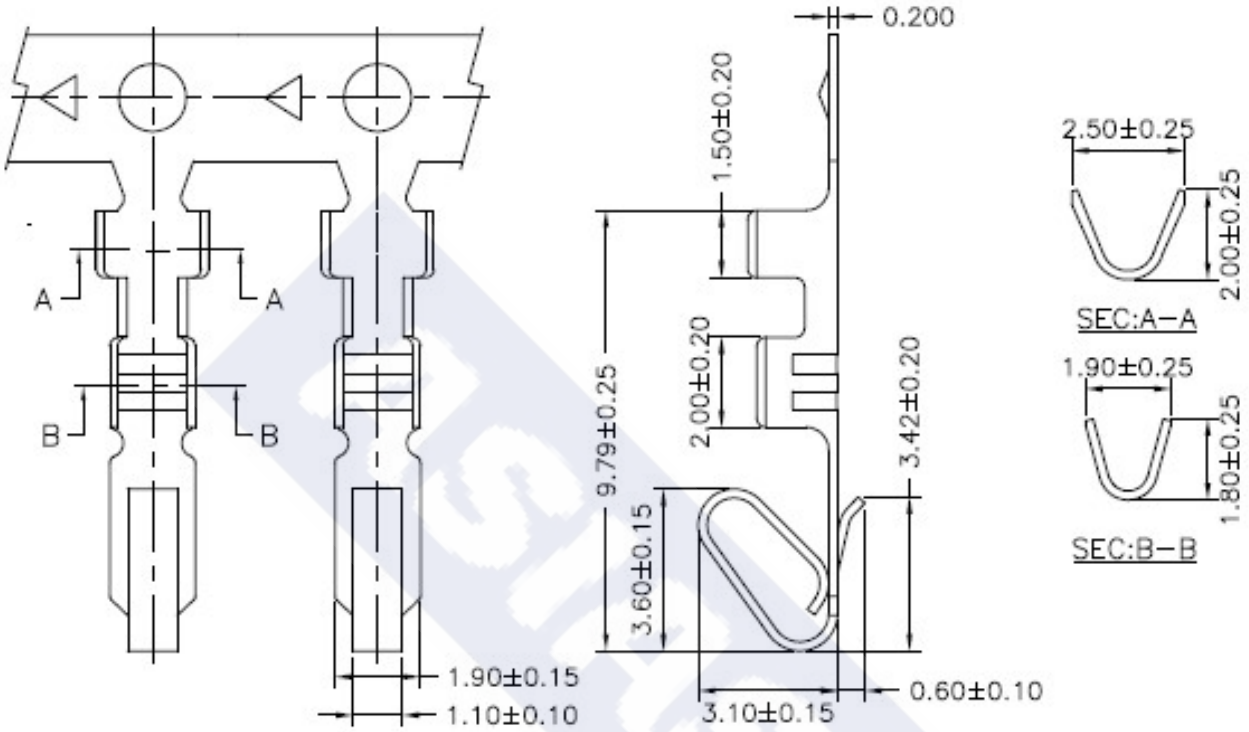

Ordering Information & Specification

Part NO.	Wire Range	Insulation O.D.	Material	Finish	SPQ
2542JT-TB	AWG#24~AWG#30	1.57mm(max)	Brass	Tin-plated	10,000 pcs/reel
2542JT-GB	AWG#24~AWG#30	1.57mm(max)	Brass	Gold-flash	10,000 pcs/reel
2542JT-TP	AWG#24~AWG#30	1.57mm(max)	Phosphor Bronze	Tin-plated	10,000 pcs/reel

** Stamping before plating

ASIAS ASIAS TECHNOLOGY CO.,LTD.	DESCRIPTION : **2.54mm Pitch, Crimp Terminal**	**GENERAL TOLERANCE**	
	PART NO. : **2542JT-XX**	X.X ± 0.25 X.XX ± 0.15 X.XXX ± 0.05	SCALE : Free