RoHS	Reach

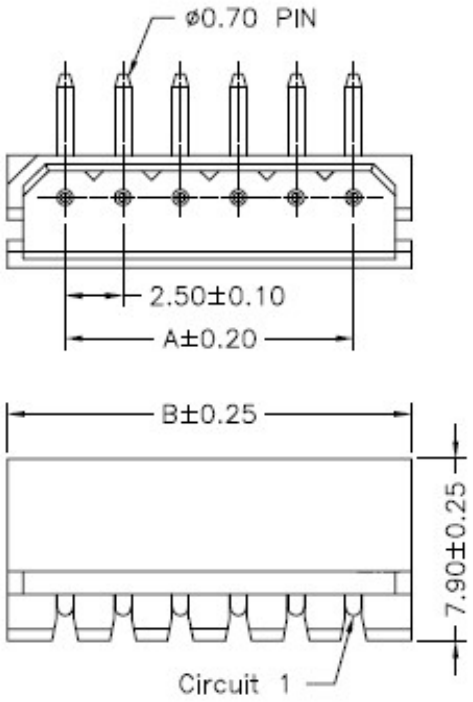

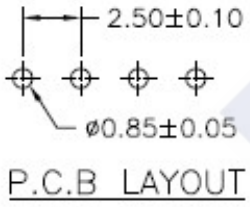

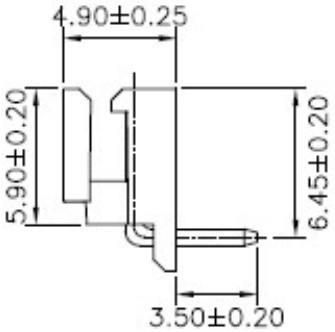

Ordering Information & Dimension

Circuit No.	Dimensions A	Dimensions B
02	2.50	7.50
03	5.00	10.00
04	7.50	12.50
05	10.00	15.00
06	12.50	17.50
07	15.00	20.00
08	17.50	22.50
09	20.00	25.00
10	22.50	27.50
11	25.00	30.00
12	27.50	32.50
13	30.00	35.00
14	32.50	37.50
15	35.00	40.00
16	37.50	42.50

Explanation of PN.

2506J R XX - X NL 0

① ② ③ ④ ⑤ ⑥

① Series No.
② Connector Type : Right Angle
③ Circuits No.
⑤ Insulator Material : 3 : Nylon66, UL 94-V0
7 : Nylon66, UL 94-V2(No Flame)
⑤ Color : NL : Natural(Beige) -- Nylon66, UL 94-V0
NL : Natural (Beige) -- Nylon66, UL 94-V2(No Flame)
⑥ Contact Plating : 0 : Tin-plated

Specification :

Current Rating :	3A AC,DC
Voltage Rating :	250V AC,DC
Temperature Range :	-25°C ~ +85°C
Contact Resistance :	20mΩ Max.
Insulation Resistance :	1000mΩ Min.
Withstanding Voltage :	1000V AC/minute
Pin Material :	Brass
Insulator Material :	Nylon66, UL 94-V0 or Nylon66, UL 94-V2(No Flame)

ASIAS ASIAS TECHNOLOGY CO.,LTD.	**DESCRIPTION :** **2.50mm Pitch,** **Receptacle, Single Row, DIP,** **Right Angle**	**GENERAL TOLERANCE**	
	PART NO. : **2506JRXX-XNL0**	X.X ± 0.25 X.XX ± 0.15 X.XXX ± 0.05	SCALE : Free