ASIAS TECHNOLOGY CO.,LTD.

RoHS Compliant

Pb

# AX50

## AX50 SEAM SEALED CERAMIC SMD CRYSTAL

**5.0 x 3.2 x 0.9 mm**
**(4PAD)**

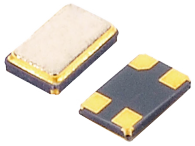

**APPLICATIONS:**

Wireless Applications
Communications, Computers
LED TVs, Test Equipment

**FEATURES:**

4 pad 5x3.2 Ceramic SMD package
AT-Cut Fundamental
Tight Tolerence and Stability Available
Pb free/ RoHS Compliant

## PART NUMBERING GUIDE

**AX50 — ..... ..... ..... — ..... ..... ..... .....**

| Frequency | Oscillation Mode | Load Capacitance | Freq. Tolerance | Freq. Stability | Operating Temp. | ESR |
|---|---|---|---|---|---|---|
| (MHz) | F: Fundamental | Please specify (CL)value in pf. SR for series. | 10: ± 10ppm<br>15: ± 15ppm<br>20: ± 20ppm<br>25: ± 25ppm<br>30: ± 30ppm<br>50: ± 50ppm | 10: ± 10ppm<br>15: ± 15ppm<br>20: ± 20ppm<br>25: ± 25ppm<br>30: ± 30ppm<br>50: ± 50ppm | A1: -10°C to +60°C<br>A2: -10°C to +70°C<br>A3: -20°C to +70°C<br>A4: -20°C to +85°C<br>A5: -30°C to +85°C<br>A6: -40°C to +85°C | Please refer to below ESR table. |

## ELECTRICAL CHARACTERISTICS

| PARAMETERS | SYMBOL | SPECIFICATION |
|---|---|---|
| Frequency Range | Fo | 8.000 ~ 54.000 MHz |
| Operation Mode | | **Fundamental(AT Cut)** |
| Operating Temperature | To | - 20 to + 70°C, -40 to +85°C, or specify |
| Storage Temperature | | - 40°C to + 85°C |
| Frequency Tolerance at +25°C | △f/F | ± 15 ppm, ± 30 ppm, ± 50 ppm or specify |
| Frequency Stability Over Operating Temperature Range | △f/F | ± 20 ppm, ± 30 ppm, ± 50 ppm or specify |
| Equivalent Series Resistance | R1 | Please find below Table |
| Shunt Capacitance | C0 | 7pF max. |
| Load Capacitance | CL | series, 18pF(Standard), or specify |
| Drive Level | DL | 100μW typical |
| Aging at 25°C | △f/F | ± 5ppm max.(first year) |
| Insulation Resistance | | 500MΩ min at 100Vdc |

## EQUIVALENT SERIES RESISTANCE(ESR)Table

| Frequency Range(MHz) | ESR(Ω) max. |
|---|---|
| **Fundamental** | |
| 8.000 ~ 9.999 | 100 |
| 10.000 ~ 14.999 | 70 |
| 15.000 ~ 19.999 | 60 |
| 20.000 ~ 34.999 | 50 |
| 35.000 ~ 54.000 | 40 |
| | |
| | |
| | |
| | |
| | |
| | |
| | |

## OUTLINE DRAWING: mm

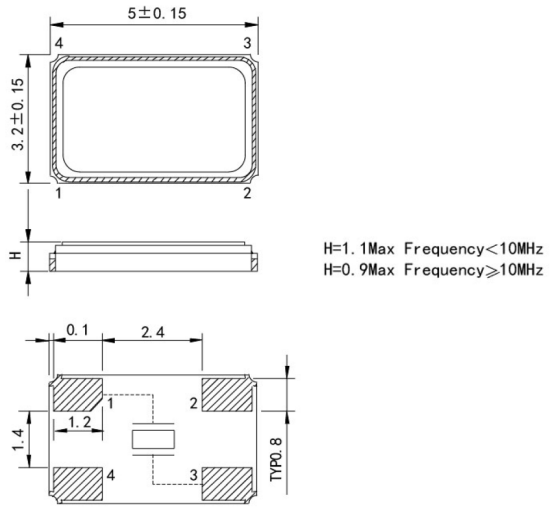


If you require further assistance, please feel free contact us at antonio@asiastek.com

**ASIAS TECHNOLOGY CO.,LTD.** www.asiastek.com
Tel: +886 02- 2943 9330